Check for updates

Tip and Junction Vortices Generated by the Sail of a Yawed Submarine Model at Low Reynolds Numbers

Juan M. Jiménez[1]
e-mail: jjimenez@upenn.edu

Alexander J. Smits
e-mail: asmits@princeton.edu

Department of Mechanical and Aerospace Engineering,
Princeton University,
Princeton, NJ 08544-5263

Results are presented on the behavior of the tip and junction vortices generated by the sail of a SUBOFF submarine model at yaw angles from 6 deg to 17 deg for a Reynolds number of 94×10^3 based on model length. The measurements were conducted in a water channel on a spanwise plane 1.3 chord lengths downstream from the trailing edge of the sail. In the vicinity of the sail hull junction, the presence of streamwise vortices in the form of horseshoe or necklace vortices locally dominates the flow. As the yaw angle is increased from 6 deg to 9 deg, the circulation of the sail tip vortex increases, and is in good accordance with predictions from finite wing theory. However, as the yaw angle is further increased, the sail boundary layer separates with an overall drop in circulation. In contrast, the circulation value for the junction vortex increases with yaw angle, and only drops slightly at the highest yaw angle. [DOI: 10.1115/1.4003651]

1 Introduction

Tip and junction vortices are characteristic of many different flows. For example, junction vortices are formed by bridge columns in waterways and scour sediments around the columns potentially compromising the structural integrity of bridges [1–3], whereas wing tip vortices produced by airplanes constrain the landing and take-off schedules at airports. For submarines, a junction vortex is formed where the sail joins the hull, and the legs of the vortex that are convected downstream introduce nonuniformities in the flow field entering the propeller, which increase the unsteady loading on the propeller and generate significant noise [4]. When the sail is yawed, a tip vortex is also formed, further complicating the flow in the wake and increasing its detection signature.

Here, we study the behavior of the tip and junction vortices generated by the sail of an idealized submarine shape as the yaw angle increases, at a Reynolds number of 94×10^3 based on model length. The model is shown schematically in Fig. 1. The sail resembles a wing with a very short aspect ratio and a rounded wingtip. Previous wake studies on this model at zero yaw angle showed that the sail introduces a considerable distortion into the wake, although the specific effects of the junction vortex were not identified [5,6]. Experiments on a similar model showed that even at small yaw angles the sail tip vortex is much stronger than the junction vortex [7], so the current work focuses on the behavior of the tip vortex. The experiments were conducted using particle image velocimetry (PIV) over a range of yaw angles, to study the unsteadiness of the flow field and to measure the strengths of the junction and tip vortices. PIV gives instantaneous snapshots of the vorticity field, and it avoids the spatial averaging effects that can be introduced by vortex meandering, as experienced in previous experiments employing fixed probes [8–10]. PIV can therefore be used to calculate the true vortex strength, and make possible comparisons based on finite wing theory.

2 Experimental Apparatus and Techniques

A DARPA SUBOFF submarine model [11] with overall length $L=0.436$ m and maximum diameter $D=0.051$ m was used for the experiments. The tip and junction flow were generated by a sail with chord length $C=36.8$ mm and span $b=22.3$ mm. The model is held in place on the opposite side of the sail by a support identical in cross-section to the sail (see Fig. 1). The boundary layer is tripped about $0.75D$ downstream of the nose of the model with a 1 mm diameter trip wire. The experiments were conducted in a 0.46 m wide $\times$ 0.33 m deep closed loop water channel (see Fig. 2). The freestream velocity was set to 0.3 m/s yielding Reynolds numbers based on model length and sail chord length of $\mathrm{Re}_L=94\times10^3$ and $\mathrm{Re}_C=8.2\times10^3$, respectively. The boundary layer on the hull at the location of the sail is expected to be turbulent, whereas the boundary layer on the sail itself is always laminar.

PIV measurements for the four yaw angles investigated, $\alpha=6$ deg, 9 deg, 12 deg, and 17 deg, were conducted in the spanwise plane downstream of the sail at $x/C=1.3$ ($=-5.1D$ upstream of the stern tip), where x is measured from the trailing edge of the sail. With the measured velocity field, the vorticity field was calculated to obtain the circulation values using the relationship

$$\Gamma=\sum_{j=1}^{n}\Omega_j\cdot\Delta A_j \tag{1}$$

where Ω_j and ΔA_j are the vorticity and its corresponding area segment, respectively. The center of the vortical structure on each flow field was identified and concentric circular areas were used to calculate the circulation until increasing the area did not increase the circulation value significantly or the calculation reached an asymptotic value. Additional node points were added to the vorticity field and the values for these node points were calculated using splines. The particle displacement error was at most 0.88% without considering the uncertainty arising from particle lagging effects, which were estimated to be less than 1% for these experiments [12,13]. The uncertainty in the vorticity calculations, assuming uncorrelated velocity data, is approximately 0.38%. With a Nyquist sampling criterion of 50% overlap, any flow motion with a wavelength shorter than 0.67 mm (corresponding to one 16×16 pixel^2 window dimension) cannot be recovered. The interpolation error was about 0.2%. For further details on the experiment, see Ref. [13].

3 Results and Discussion

A typical instantaneous nondimensional vorticity field, $\omega^*=\omega_x C/U_\infty$, is shown in Fig. 3 for a yaw angle of 9 deg. The presence of the sail tip vortex is evident at $z/C\approx-0.08$ and $y/C\approx-0.45$ accompanied by various transient high vorticity concentration areas that are not present in the time-averaged flow field. At $x/C=1.3$ the tip vortex is still at an early stage of development as demonstrated by the asymmetric vorticity distribution. The asymmetry is very likely due to the interaction of the tip vortex with secondary structures shed from the tip [10,14,15]. Previous SUBOFF sail wake measurements also show that the sail tip vortex lacks coherence at $x/c\approx1.42$ [7], while others found that the core becomes axisymmetric within $2\leq x/C\leq3$ [10,16].

[1]Corresponding author. Present address: Institute for Medicine and Engineering, University of Pennsylvania, Philadelphia, PA 19104.

Contributed by the Fluids Engineering Division of ASME for publication in the Journal of Fluids Engineering. Manuscript received October 4, 2010; final manuscript received February 9, 2011; published online March 10, 2011. Assoc. Editor: James A. Liburdy.

 Copyright © 2011 by ASME

Downloaded from http://asmedigitalcollection.asme.org/fluidsengineering/article-pdf/133/3/034501/5586114/034501_1.pdf by University of New South Wales user on 31 October 2021

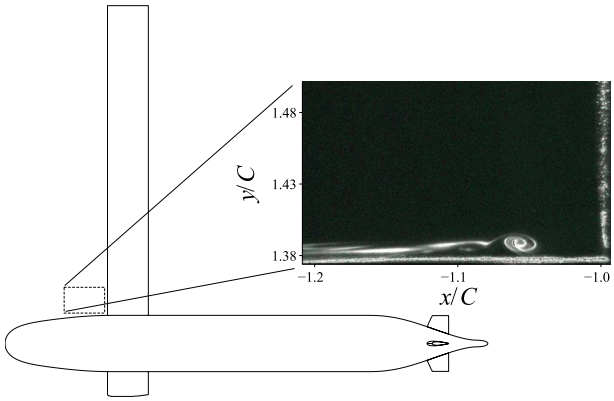

Fig. 1 SUBOFF model and flow visualization of the junction vortex upstream of the support at a Reynolds number of 64 $\times 10^3$. Flow is from left to right.

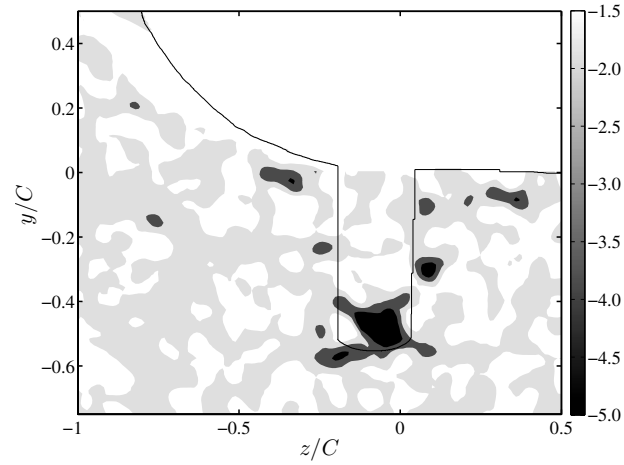

Fig. 3 Instantaneous nondimensional streamwise vorticity field, $\omega^* = \omega_x C/U_\infty$, at $x/C = 1.3$. In this view, the model profile is not circular because $\alpha = 9$ deg.

Meandering of the tip vortex is a commonly observed phenomenon [7–10]. Similarly, Fig. 4 shows the transient nature of the sail tip vortex location for different yaw angles, while remaining closer to the low pressure side of the sail. The sail tip vortex core detection was more difficult at $\alpha = 17$ deg due to the boundary layer separation over the sail resulting in incoherent flow structures dominating the near wake.

Figure 5 shows the instantaneous nondimensional circulation distributions $\Gamma^* = \Gamma/(U_\infty C)$ for sail tip vortices at 6 deg, 9 deg, and 12 deg, where Γ is the circulation and U_∞ is the freestream velocity. The horizontal axis in these figures corresponds to the nondimensional area of the vortex, $A^* = A/C^2$. The unsteadiness of the sail tip vortex is again evident at all yaw angles. On average the circulation increases as the yaw angle is increased from 6 deg to 9 deg, but at 12 deg a larger variability is present suggesting initial signs of boundary layer separation on the sail. In this respect, Shekarriz et al. [17] observed that for the DARPA SUBOFF sail, the flow structure around the core becomes more stable at $\mathrm{Re}_C \approx 2.2 \times 10^5$, which may correspond to transition from laminar to turbulent flow on the sail. Variations in the circulation strength may also be due to the entrainment of secondary vortices into the core of the tip vortex [7,18]. However, at the low Reynolds numbers for the experiments presented herein, it is expected that the laminar boundary layer over the sail has separated and the variability in circulation correlates with the unsteady nature of the separation [19,20].

The mean nondimensional spanwise vorticity fields $\omega^* = \omega_x C/U_\infty$ are shown in Fig. 6. The junction vortex becomes more apparent in these time-averaged fields, at $z/C \approx 0.2$ and $y/C \approx -0.05$, as it strengthens with increasing yaw angle, as does the tip vortex, at least up to 9 deg. For 6 deg and 9 deg, the vorticity distribution is slightly asymmetric with higher vorticity values extending toward $z/C \approx 0.1$, which corresponds to the higher pressure side of the symmetric sail. At 12 deg the vortex becomes more asymmetric and the vorticity values in the core are somewhat smaller than in the 9 deg case. A larger decrease is observed for the 17 deg case, where the vortex is highly asymmetric and much less coherent.

The mean calculations serve as a qualitative insight into the nature of the sail tip vortex flow but cannot give quantitative information because the location of the sail tip vortex varies with time. However, the junction vortex location remains relatively constant and the mean vorticity values were used to calculate the mean circulation distribution shown in Fig. 7. The values increase

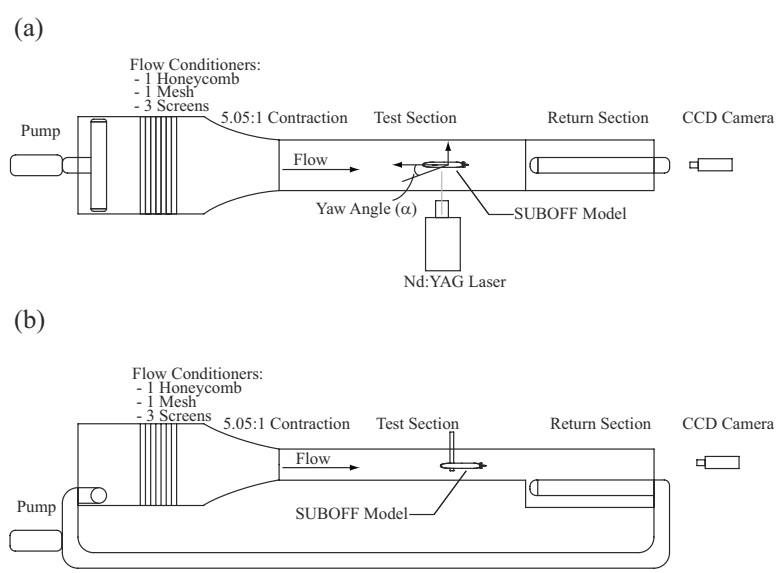

Fig. 2 (*a*) Top view and (*b*) side view of the experimental setup

Downloaded from http://asmedigitalcollection.asme.org/fluidsengineering/article-pdf/133/3/034501/5586114/034501_1.pdf by University of New South Wales user on 31 October 2021

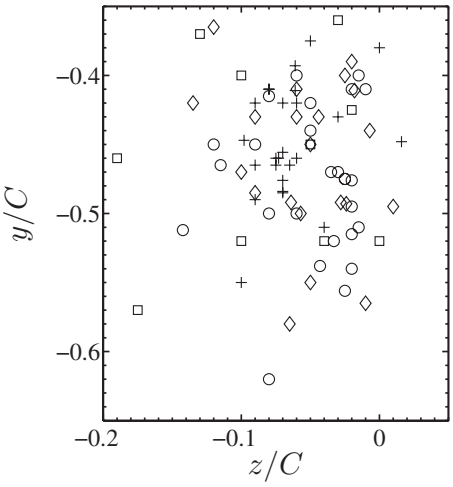

Fig. 4 Tip vortex location at random snap shots in time: ○, α=6 deg; +, 9 deg; ◇, 12 deg; and □, 17 deg

as the yaw angle is increased from 6 deg to 9 deg to 12 deg, but start to decrease slowly as the yaw angle increases to 17 deg. Throughout the inner core of the vortex, the circulation for 17 deg is greater than that for 12 deg. Furthermore, the slope $-\delta\Gamma^*/\delta A^*$ for the inner core of the vortex, $A^* < 1.2\times10^{-4}$, increases with yaw angle while it seems to be reaching an asymptotic value as it approaches 17 deg. At about $A^*=2.6\times10^{-4}$ the total circulation is greater at 12 deg than at 17 deg. The primary vortex in Fig. 1

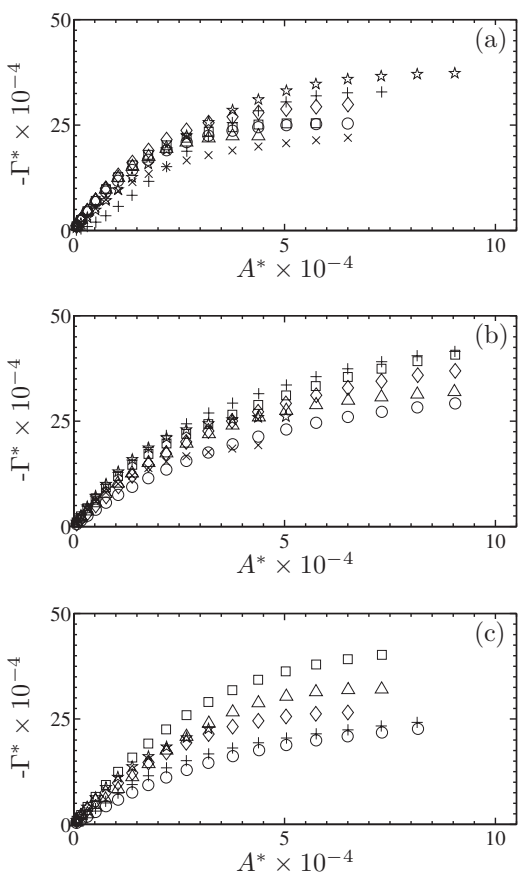

Fig. 5 Instantaneous circulation distributions for sail tip vortex at Re_C=8.2×10³. (*a*) α=6 deg, (*b*) 9 deg, and (*c*) 12 deg. Each symbol corresponds to a random snap shot in time.

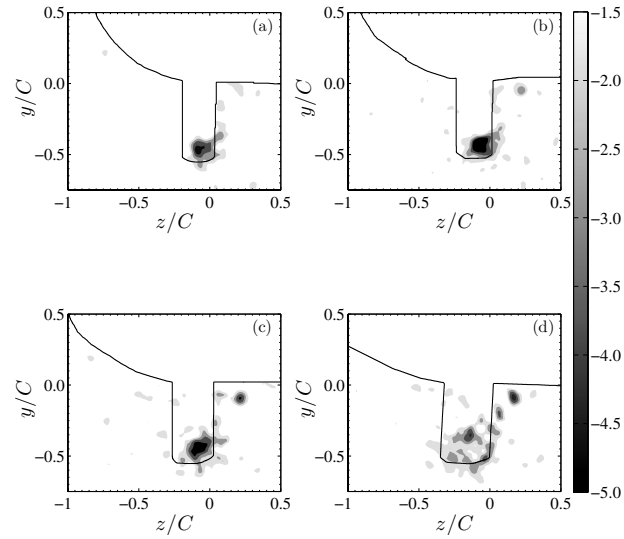

Fig. 6 Mean streamwise vorticity field, $\omega^*=\omega_x C/U_\infty$, at x/C =1.3. In these views, the model profile is not circular because (*a*) α=6 deg, (*b*) 9 deg, (*c*) 12 deg, and (*d*) 17 deg.

seems to be accompanied by a secondary vortex around $x/C=-1.1$. Although Fig. 1 shows the origin of the junction vortex on the support side, the vortex on the sail side is expected to develop similarly, which is the focus of the flow field studied here.

The average sail tip vortex circulation was calculated from the instantaneous distributions for the 6 deg, 9 deg, and 12 deg yaw angles (see Fig. 8). As the yaw angle is increased from 6 deg to 9 deg to 12 deg, the mean circulation first increases and then decreases, which is likely due to the presence of a boundary layer separation bubble on the sail surface, or the high degree of three-dimensionality of the boundary layer at the larger yaw angles (see also Fig. 5(*c*)). As the yaw angle is further increased to 17 deg, we

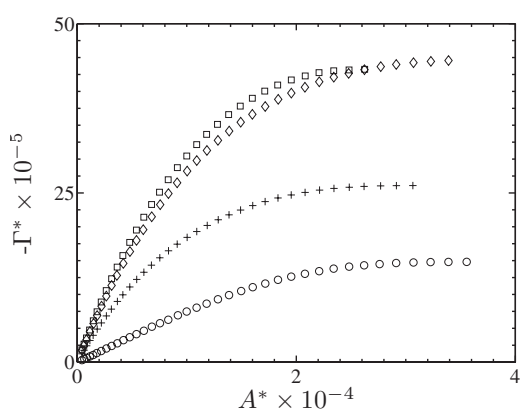

Fig. 7 Mean circulation distribution of junction vortex: ○, α =6 deg; +, 9 deg; ◇, 12 deg; and □, 17 deg

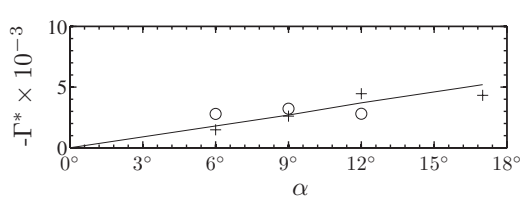

Fig. 8 Mean circulation for 6 deg$\leq\alpha\leq$17 deg: ○, sail tip vortex; +, junction vortex (multiplied by 10); and —, sail tip vortex circulation from Eq. (2)

Downloaded from http://asmedigitalcollection.asme.org/fluidsengineering/article-pdf/133/3/034501/5586114/034501_1.pdf by University of New South Wales user on 31 October 2021

expect the boundary layer to be fully separated, resulting in a highly incoherent wake. In contrast, the circulation of the junction vortex continues to increase with yaw angle and only starts to decrease slowly at 17 deg (see Fig. 8). It can also be observed that the circulation values for the sail tip vortex are about an order of magnitude larger than those of the junction vortex, as first observed by Shekarriz et al. [7].

We can also compare the measured circulation of the tip vortex to the values predicted by finite wing theory. For aspect ratios $\Lambda = b/C$ less than 4, where b is the sail span, we have

$$\frac{C_L}{C_{L0}} = \frac{1}{\sqrt{1 + \left(\frac{a_0}{\pi e \Lambda}\right)^2} + \frac{a_0}{\pi e \Lambda}} \tag{2}$$

[21], where $C_L = (2C\Gamma^*)/(A_s)$ is the lift coefficient of the sail with finite span, C_{L0} is the lift coefficient for the sail with infinite span, a_0 is the slope of the lift coefficient curve for the sail with infinite span, A_s is the sail planform area, and e is the span efficiency factor, typically between 0.85 and 0.95. The curve in Fig. 8 is computed using $e = 0.875$. The data follow the trends of the finite wing prediction.

From the experiments by Roddy [22] and the analysis by Shekarriz et al. [7], the dimensionless mean circulation $\Gamma/(U_\infty C) = 0.5\overline{C_L}$, where $\overline{C_L}$ is the lift coefficient, and was calculated for the sail tip vortex of the DARPA SUBOFF model at $\mathrm{Re}_C \approx 10^6$ and yaw angles of 5 deg and 10 deg. Their values for the dimensionless mean circulation at these two angles were 0.15 and 0.29, respectively. These values compare with 0.127, 0.147, and 0.128 at 6 deg, 9 deg, and 12 deg, respectively, for the data presented here. The differences can be attributed to the significant difference in Reynolds numbers. However, in both cases, for moderate angles, the circulation increases approximately linearly with yaw angle, as expected from finite wing theory.

4 Conclusion

PIV measurements were used to study the behavior of the tip and junction vortices generated by the sail attached to a DARPA SUBOFF submarine model at $\mathrm{Re}_L = 94 \times 10^3$ for yaw angles 6 deg $\leq \alpha \leq$ 17 deg. The tip vortex is highly unsteady, but its mean circulation increases with yaw angle as the angle increases from 6 deg to 9 deg before decreasing as the angle increases to 12 deg. At the same time, the fluctuating circulation increases, probably due to the partial separation of the boundary layer on the sail. As the yaw angle is increased beyond 12 deg, the boundary layer becomes fully separated and the circulation of the tip vortex decreases further. A similar phenomenon is observed for the junction vortex. As the angle is increased the circulation of the junction vortex initially increases, but when the yaw angle is increased to 17 deg the value starts to decrease at a slow rate. It can also be observed that the circulation values for the tip vortex are about an order of magnitude larger than those of the junction vortex, and the strength of the tip vortex varies linearly with yaw angle, and is well predicted by finite wing theory.

Acknowledgment

This work was made possible by Office of Naval Research Grant Nos. N00014-07-1-0111 and N00014-09-1-0263 (Program Manager Ron Joslin).

Nomenclature

A = dimensional area of vortex
A_s = sail planform area
A^* = nondimensional area of vortex
C = chord length of the sail
C_L = lift coefficient of the sail with finite span
C_{L0} = lift coefficient of the sail with infinite span
D = maximum diameter of the submarine model
L = overall length of the submarine model
Re_L = Reynolds number based on the length of model
Re_C = Reynolds number based on the sail chord length
U_∞ = freestream velocity
b = span length of the sail
u = axial (streamwise) velocity component
v = normal (vertical) velocity component
x = axial (streamwise) coordinate
y = normal (vertical) coordinate
z = transverse (spanwise) coordinate
α = angle of yaw
Γ = circulation
Γ^* = instantaneous nondimensional circulation
Ω = vorticity
ω_x = streamwise vorticity

References

[1] Dargahi, B., 1990, "Controlling Mechanism of Local Scouring," J. Hydraul. Eng., **116**(10), pp. 1197–1214.
[2] Melville, B. W., 1997, "Pier and Abutment Scour: Integrated Approach," J. Hydraul. Eng., **123**(2), pp. 125–136.
[3] Bilanin, A. J., and Kaufman, A. E., 2001, "The Use of Scrap Tires for Scour Protection," FHWA Midwestern Resource Center Hydraulics Engineers' Conference, Madison, WI.
[4] Committee for Naval Hydromechanics Science and Technology, Naval Studies Board, and National Research Council, 2000, *An Assessment of Naval Hydromechanics Science and Technology*, National Academies, Washington, DC, Chap. 3.
[5] Jiménez, J. M., Hultmark, M., and Smits, A. J., 2010, "The Intermediate Wake of a Body of Revolution at High Reynolds Numbers," J. Fluid Mech., **659**, pp. 516–539.
[6] Jiménez, J. M., Reynolds, R., and Smits, A. J., 2010, "The Effects of Fins on the Intermediate Wake of a Submarine Model," ASME J. Fluids Eng., **132**(3), p. 031102.
[7] Shekarriz, A., Fu, T. C., Katz, J., Liu, H. L., and Huang, T. T., 1992, "Study of Junction and Tip Vortices Using Particle Displacement Velocimetry," AIAA J., **30**(1), pp. 145–152.
[8] Gasparek, E. P., 1957, "Viscous Decay of a Vortex," MS thesis, Syracuse University, Syracuse, New York.
[9] Corsiglia, V. R., Schwind, R. G., and Chigier, N. A., 1973, "Rapid Scanning, Three-Dimensional Hot-Wire Anemometer Surveys of Wing-Tip Vortices," J. Aircr., **10**, pp. 752–757.
[10] Green, S. I., and Acosta, A. J., 1991, "Unsteady Flow in Trailing Vortices," J. Fluid Mech., **227**, pp. 107–134.
[11] Groves, N. C., Huang, T. T., and Chang, M. S., 1989, "Geometric Characteristics of DARPA SUBOFF Models," David Taylor Research Center, Technical Report No. DTRC/SHD-1298-01.
[12] Mei, R., 1996, "Velocity Fidelity of Flow Tracer Particles," Exp. Fluids, **22**, pp. 1–13.
[13] Jiménez, J., 2007, "High Reynolds Number Flows About Bodies of Revolution With Application to Submarines and Torpedoes," Ph.D. thesis, Princeton University, Princeton, NJ.
[14] Chigier, N. A., and Corsiglia, V. R., 1971, "Tip Vortices—Velocity Distributions," NASA, Technical Report No. TM-62087.
[15] Engel, M., 1995, "A Wind-Tunnel Investigation of a Wing-Tip Trailing Vortex," MS thesis, Virginia Polytechnic Institute and State University, Blacksburg, VA.
[16] Accardo, L., Cenedese, A., and Cioffi, F., 1984, "Experimental Analysis of Tip Vortex by Laser Doppler Anemometry," Second International Symposium on Applications of Laser Anemometry to Fluid Mechanics, Lisbon, Portugal.
[17] Shekarriz, A., Fu, T. C., Katz, J., and Huang, T. T., 1993, "Near Field Behavior of a Tip Vortex," AIAA J., **31**(1), pp. 112–118.
[18] El-Ramly, Z., and Rainbird, W. J., 1977, "Flow Survey of the Vortex Wake Behind Wings," J. Aircr., **14**(11), pp. 1102–1108.
[19] Mueller, T. J., and Batil, S. M., 1982, "Experimental Studies of Separation on a Two-Dimensional Airfoil at Low Reynolds Numbers," AIAA J., **20**(4), pp. 457–463.
[20] Rinoie, K., and Takemura, N., 2004, "Oscillating Behaviour of Laminar Separation Bubble Formed on an Aerofoil Near Stall," Aeronaut. J., **108**(3), pp. 153–163.
[21] Helmbold, R., 1965, "A Modification of Lanchester's Equations," Oper. Res., **13**, pp. 857–859.
[22] Roddy, R. F., 1990, "Investigation of the Stability and Control Characteristics of Several Configurations of the DARPA SUBOFF Model (DTRC Model 5470) From Captive-Model Experiments," David Taylor Research Center, Technical Report No. DTRC/SHD-1298-08.

Downloaded from http://asmedigitalcollection.asme.org/fluidsengineering/article-pdf/133/3/034501/5586114/034501_1.pdf by University of New South Wales user on 31 October 2021